ASSEMBLY INSTRUCTION

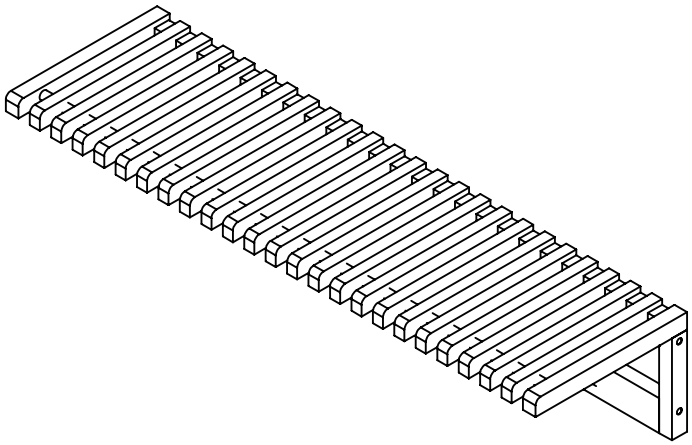

①X1

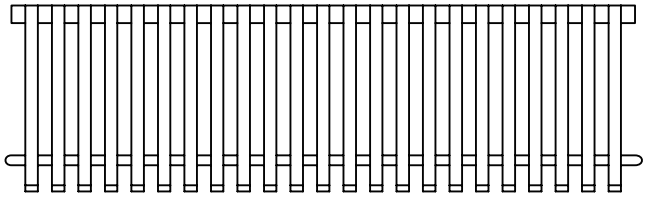

②X1

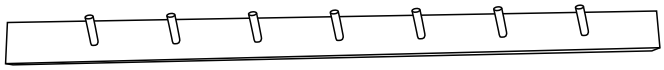

③X1

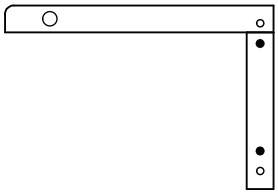

④X1

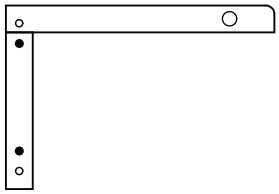

Ⓐ X4

Ⓑ X4

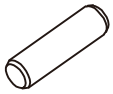

Ⓒ X1

1

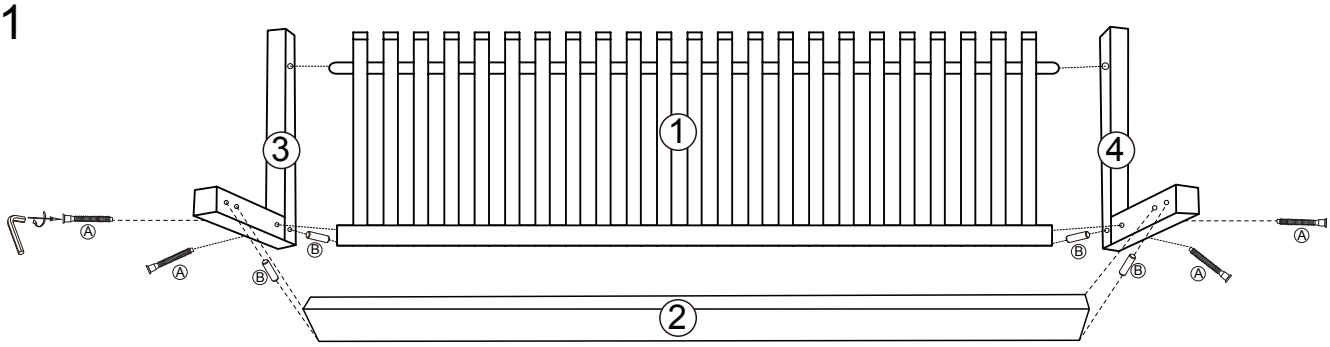
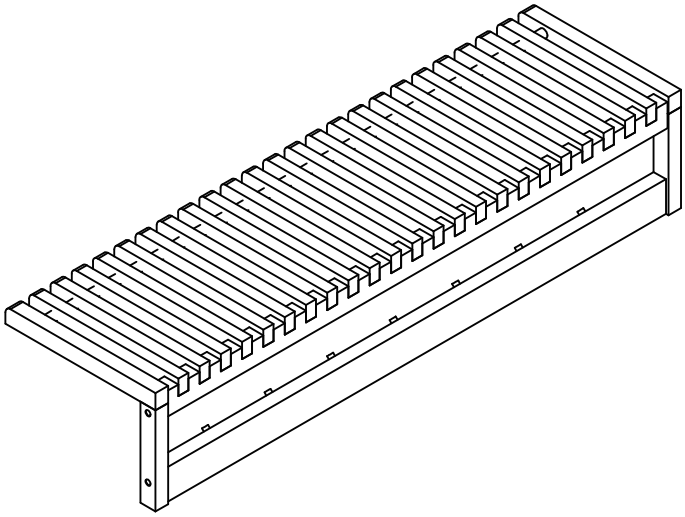
2